SCREW: E1585	MATERIAL: COPPER	REV: G.1		ILSCO connections matter
CAT. NO.: CP-8	PLATING: BRIGHT DIP	DRAWN BY: JG	SCALE:3=1	800-776-9775 www.ilsco.com
INFORMATION SHEET: FORM 2	MARKING: SEE BELOW	DATE: 10/22/2007	SIZE: A	DWG. NO. R0596
				SHEET: 1 OF 1

SCALE 3 : 1

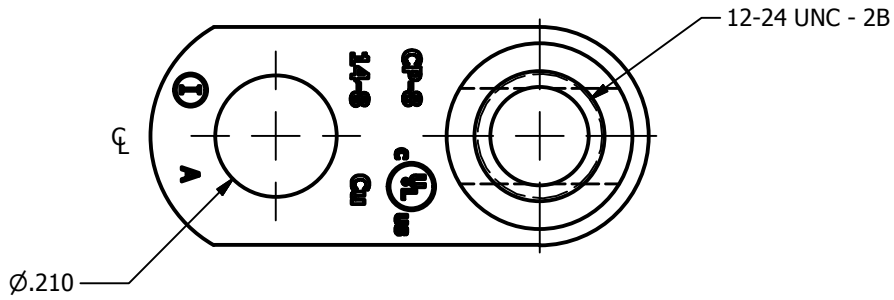

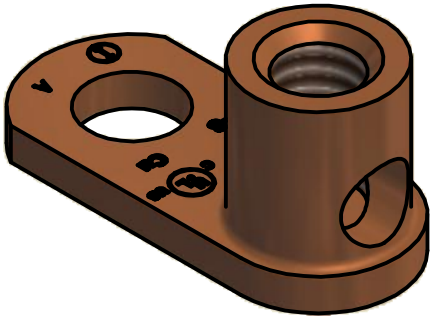

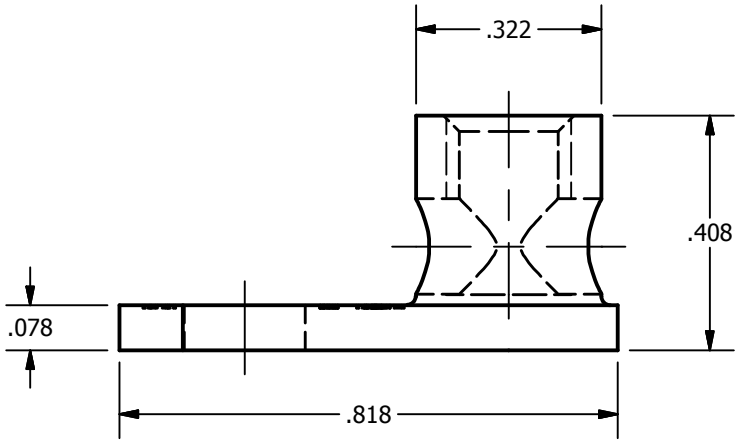

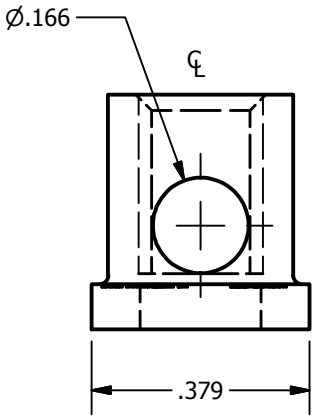

THE INFORMATION CONTAINED WITHIN THIS DOCUMENT IS PROPRIETARY TO ILSCO AND MAY NOT BE DISCLOSED WITHOUT PRIOR WRITTEN CONSENT